jeeinfo
Your JEE Guide

MP Board Class X · Science

Sample Question Paper 1 · Session 2026-27

Time allowed: 3 hours **Maximum marks: 75**

© 2026 JEEInfo (www.jeeinfo.in). Free for personal study only. Do not copy, sell or republish without written permission.
This is an original practice paper written to the MPBSE 2027 sample question paper pattern; it is not issued by MPBSE.

General instructions:

1. All questions are compulsory.
2. Questions 1 to 5 are 30 objective type questions. Each carries 1 mark.
3. Internal options are given in questions 18 to 23.
4. Marks of each question are indicated against it.
5. Answer questions 6 to 17 in about 30 words each.
6. Answer questions 18 to 20 in about 75 words each.
7. Answer questions 21 to 23 in about 120 words each.
8. Draw neat and clean labelled diagrams wherever required.

1.	**(i)** *Choose the correct option and write it:* Rust is mainly: (a) iron carbonate (b) iron sulphide (c) iron(II) oxide (d) hydrated iron(III) oxide	1
	(ii) Which gas is released when an acid reacts with a metal carbonate? (a) carbon dioxide (b) hydrogen (c) oxygen (d) chlorine	1
	(iii) Which metal is kept under kerosene to protect it from air and moisture? (a) aluminium (b) sodium (c) iron (d) copper	1
	(iv) Which of the following compounds contains a carbon–carbon triple bond? (a) ethene (b) ethanol (c) ethyne (d) ethane	1
	(v) The power of a concave lens of focal length 25 cm is: (a) −4 D (b) +25 D (c) +4 D (d) −0.25 D	1
	(vi) The SI unit of electric resistance is: (a) watt (b) ohm (c) ampere (d) volt	1

2.	**(i)** *Fill in the blanks:* Green plants make their food by the process of _____.	1
	(ii) The junction between two neurons is called a _____.	1
	(iii) The male reproductive part of a flower is the _____.	1
	(iv) Mendel carried out his experiments on the garden _____ plant.	1
	(v) The splitting of white light into its component colours is called _____.	1
	(vi) Electric current in a circuit is measured with an _____.	1
3.	**(i)** *Write True or False:* Burning of magnesium ribbon in air is a combination reaction.	1
	(ii) All metals are solids at room temperature.	1
	(iii) Butane and isobutane are structural isomers.	1
	(iv) Arteries carry blood away from the heart.	1
	(v) The image formed by a plane mirror is real.	1
	(vi) A fuse wire has a high melting point.	1
4.	**(i)** *Answer in one word or one sentence:* Name the gas evolved when zinc reacts with dilute sulphuric acid.	1
	(ii) Below what pH does tooth enamel begin to corrode?	1
	(iii) Name the hormone that controls the blood sugar level.	1
	(iv) On which part of the eye is the image formed?	1
	(v) Write the SI unit of electric charge.	1
	(vi) Which organisms form the first trophic level of every food chain?	1
5.	Match each common name in column A with its chemical formula in column B:	6
6.	Balance the equation: $Fe + H_2O \rightarrow Fe_3O_4 + H_2$.	2

Column A	Column B
(i) Baking soda	(a) $Na_2CO_3 \cdot 10H_2O$
(ii) Washing soda	(b) $CaOCl_2$
(iii) Bleaching powder	(c) $NaHCO_3$
(iv) Plaster of Paris	(d) $CaSO_4 \cdot \frac{1}{2}H_2O$
(v) Common salt	(e) $CaSO_4 \cdot 2H_2O$
(vi) Gypsum	(f) NaCl

© 2026 JEEInfo (www.jeeinfo.in). Free for personal study only. Do not copy, sell or republish without written permission. Not an official MPBSE paper.

7.	Why does dry HCl gas not change the colour of dry blue litmus paper?	2
8.	Give two reasons why aluminium is used to make cooking utensils.	2
9.	Why are most carbon compounds poor conductors of electricity?	2
10.	What are the products of anaerobic respiration in yeast?	2
11.	Distinguish between autotrophic and heterotrophic nutrition.	2
12.	Write two functions of the placenta.	2
13.	Why are traits acquired during an individual's lifetime not passed on to the next generation?	2
14.	State the two laws of reflection of light.	2
15.	Why do stars twinkle?	2
16.	An electric bulb draws a current of 0.5 A from a 220 V supply. Find its power and resistance.	2
17.	What is biological magnification?	2
18.	Write balanced chemical equations for: (a) sodium reacting with water; (b) heating calcium carbonate; (c) iron nails placed in copper sulphate solution. **OR** What happens when (a) ethanol is heated with excess concentrated sulphuric acid at 443 K; (b) ethanoic acid reacts with sodium carbonate; (c) methane burns in air? Write the equations.	3
19.	How is water carried from the roots to the leaves of a tall tree? What is the role of transpiration in it? **OR** What is an artificial kidney (haemodialysis)? When is it needed?	3
20.	An object 4 cm tall is placed 15 cm in front of a concave lens of focal length 10 cm. Find the position, size and nature of the image. **OR** What is myopia? State two causes and how it is corrected.	3
21.	Describe the electrolytic refining of copper with a labelled diagram. **OR** How is zinc obtained from zinc blende? Write the equations.	4

© 2026 JEEInfo (www.jeeinfo.in). Free for personal study only. Do not copy, sell or republish without written permission. Not an official MPBSE paper.

22.	Describe the process of sexual reproduction in flowering plants, from pollination to the formation of seed and fruit. **OR** Explain, with a cross, how Mendel showed that one trait of a pair can be dominant over the other.	4
23.	Resistors of 6 Ω, 12 Ω and 4 Ω are connected in parallel across a 6 V battery. Find (a) the total resistance; (b) the total current; (c) the current in each resistor. **OR** Draw the magnetic field lines of a current-carrying solenoid. State two of its properties and one use.	4

© 2026 JEEInfo (www.jeeinfo.in). Free for personal study only. Do not copy, sell or republish without written permission. Not an official MPBSE paper.

Answers and Marking Scheme

Marks for each step are shown in brackets. Any correct alternative method gets full credit.

Question 1

(i) **(d)** hydrated iron(III) oxide. *Working:* Rust is approximately $Fe_2O_3 \cdot xH_2O$.

(ii) **(a)** carbon dioxide. *Working:* E.g. $Na_2CO_3 + 2HCl \rightarrow 2NaCl + H_2O + CO_2$.

(iii) **(b)** sodium. *Working:* Sodium reacts vigorously with oxygen and water.

(iv) **(c)** ethyne. *Working:* Ethyne (acetylene) is HC≡CH.

(v) **(a)** −4 D. *Working:* P = 1/f = 1/(−0.25 m) = −4 D.

(vi) **(b)** ohm. *Working:* R = V/I, measured in ohms (Ω).

Question 2

(i) photosynthesis.

(ii) synapse.

(iii) stamen.

(iv) pea.

(v) dispersion.

(vi) ammeter.

Question 3

(i) True: $2Mg + O_2 \rightarrow 2MgO$.

(ii) False: mercury is a liquid.

(iii) True: both are C_4H_{10}.

(iv) True.

(v) False: it is virtual and erect.

(vi) False: it has a low melting point so that it melts when the current is too high.

Question 4

(i) Hydrogen.

(ii) 5.5.

(iii) Insulin.

(iv) The retina.

(v) Coulomb (C).

(vi) Producers (green plants).

5. (i) – (c) $NaHCO_3$; (ii) – (a) $Na_2CO_3 \cdot 10H_2O$; (iii) – (b) $CaOCl_2$; (iv) – (d) $CaSO_4 \cdot \tfrac{1}{2}H_2O$; (v) – (f) NaCl; (vi) – (e) $CaSO_4 \cdot 2H_2O$

6. $3Fe + 4H_2O \rightarrow Fe_3O_4 + 4H_2$ (2).

© 2026 JEEInfo (www.jeeinfo.in). Free for personal study only. Do not copy, sell or republish without written permission. Not an official MPBSE paper.

7. Acids show their properties only when H^+ ions are present (1). Dry HCl gas does not ionise; H^+ ions form only in water (1).

8. It is a good conductor of heat (1). It is light and a thin layer of oxide on its surface protects it from corrosion (1).

9. Carbon forms covalent bonds by sharing electrons (1). Such compounds do not form ions, so they cannot carry current (1).

10. Glucose is broken into ethanol and carbon dioxide (1), releasing a small amount of energy (1).

11. Autotrophs make their own food from simple substances such as CO_2 and water, e.g. green plants (1). Heterotrophs depend on food made by other organisms, e.g. animals and fungi (1).

12. It passes nutrients and oxygen from the mother's blood to the embryo (1). It removes wastes produced by the embryo into the mother's blood (1).

13. Acquired traits are changes in body (somatic) tissues (1). They do not change the DNA of the germ cells, so they cannot be inherited (1).

14. The angle of incidence equals the angle of reflection (1). The incident ray, the normal at the point of incidence and the reflected ray lie in the same plane (1).

15. Starlight is refracted by layers of air whose refractive index keeps changing (1). The apparent position and brightness of the star keep changing, so it seems to twinkle (1).

16. P = VI = 220 × 0.5 = 110 W (1). R = V/I = 220/0.5 = 440 Ω (1).

17. The increase in concentration of harmful non-biodegradable chemicals, such as pesticides, at each higher trophic level of a food chain (1). Humans, at the top of many food chains, collect the most (1).

18. (a) $2Na + 2H_2O \rightarrow 2NaOH + H_2$ (1). (b) $CaCO_3 \rightarrow CaO + CO_2$ on heating (1). (c) $Fe + CuSO_4 \rightarrow FeSO_4 + Cu$ (1).

OR (a) Ethanol is dehydrated to ethene: $CH_3CH_2OH \rightarrow CH_2{=}CH_2 + H_2O$ (1). (b) Carbon dioxide is evolved: $2CH_3COOH + Na_2CO_3 \rightarrow 2CH_3COONa + H_2O + CO_2$ (1). (c) $CH_4 + 2O_2 \rightarrow CO_2 + 2H_2O$, with heat and light (1).

19. Root cells take in ions from the soil, creating a difference in concentration that draws water into the root xylem (1). The xylem vessels of roots, stems and leaves are interconnected, so water moves up as a continuous column (1). Transpiration, the loss of water vapour from the leaves, creates a suction that pulls this column upwards; it is the main driving force in tall plants, especially during the day (1).

OR It is a device used to remove nitrogenous wastes from the blood when the kidneys fail (1). Blood is passed through long tubes with semi-permeable lining, suspended in a dialysing fluid of the same osmotic pressure as blood but without the wastes (1). Wastes diffuse out and the purified blood is returned to the body; unlike the kidney, there is no reabsorption (1).

20. $\frac{1}{v} = \frac{1}{f} + \frac{1}{u} = -\frac{1}{10} - \frac{1}{15} = -\frac{1}{6}$, so v = –6 cm (1). m = v/u = (–6)/(–15) = 0.4, so the image is 1.6 cm tall (1). It is virtual, erect and diminished, 6 cm from the lens on the same side as the object (1).

© 2026 JEEInfo (www.jeeinfo.in). Free for personal study only. Do not copy, sell or republish without written permission. Not an official MPBSE paper.

OR A defect in which distant objects cannot be seen clearly; the image forms in front of the retina (1). Causes: excessive curvature of the eye lens, or elongation of the eyeball (1). It is corrected with a concave lens of suitable power (1).

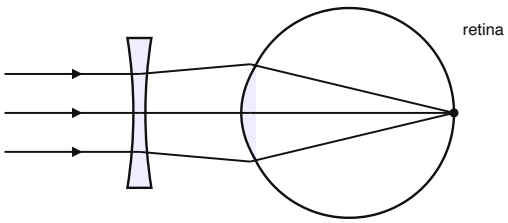

(b) Corrected with a concave lens

21. Labelled diagram (1):

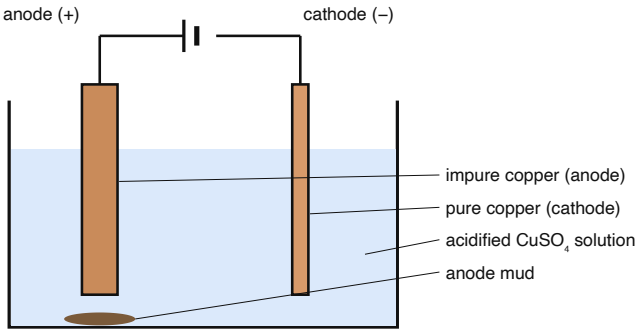

The impure copper is the anode, a thin strip of pure copper the cathode, and acidified copper sulphate solution the electrolyte (1). On passing current, copper from the anode dissolves and pure copper is deposited on the cathode (1). Soluble impurities stay in the solution; insoluble ones settle below the anode as anode mud (1).

OR Zinc blende (ZnS) is concentrated and then roasted in excess air: $2ZnS + 3O_2 \rightarrow 2ZnO + 2SO_2$ (2). The oxide is reduced with carbon: $ZnO + C \rightarrow Zn + CO$ (1). Zinc is then refined (1).

22. Pollen grains are transferred from the anther to the stigma (pollination) (1). A pollen tube grows through the style to the ovule, carrying the male germ cell (1). The male germ cell fuses with the female germ cell in the ovule to form a zygote (fertilisation) (1). The zygote grows into an embryo, the ovule becomes the seed and the ovary becomes the fruit (1).

OR Pure tall (TT) × pure dwarf (tt) gave only tall plants in F_1 (Tt) (1). Self-pollinating F_1 gave F_2 (1):

	T	t
T	TT	Tt
t	Tt	tt

F_2: tall : dwarf = 3 : 1

The dwarf trait reappeared in one quarter of the F_2 plants (1), so it was present but not expressed in F_1: tall is dominant, dwarf recessive (1).

23. Circuit (½):

© 2026 JEEInfo (www.jeeinfo.in). Free for personal study only. Do not copy, sell or republish without written permission. Not an official MPBSE paper.

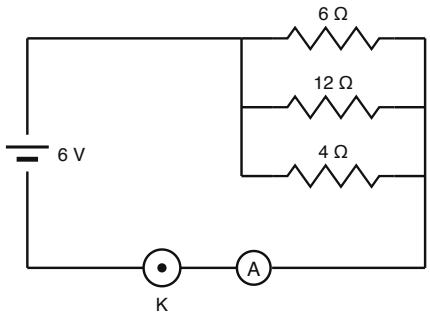

(a) $\frac{1}{R} = \frac{1}{6} + \frac{1}{12} + \frac{1}{4} = \frac{6}{12}$, so R = 2 Ω (1). (b) I = 6/2 = 3 A (1). (c) 6/6 = 1 A, 6/12 = 0.5 A, 6/4 = 1.5 A (1½).

OR Field pattern (1½):

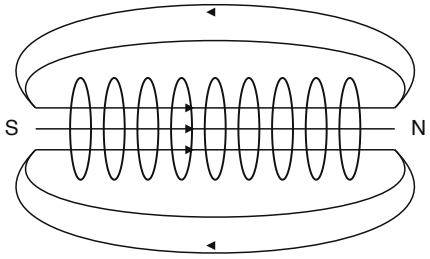

Inside, the field lines are parallel, so the field is uniform; outside it resembles that of a bar magnet (1½). Use: making an electromagnet with a soft iron core (1).

© 2026 JEEInfo (www.jeeinfo.in). Free for personal study only. Do not copy, sell or republish without written permission. Not an official MPBSE paper.