jeeinfo
Your JEE Guide

MP Board Class X · Science

Sample Question Paper 6 · Session 2026-27

Time allowed: 3 hours **Maximum marks: 75**

© 2026 JEEInfo (www.jeeinfo.in). Free for personal study only. Do not copy, sell or republish without written permission.
This is an original practice paper written to the MPBSE 2027 sample question paper pattern; it is not issued by MPBSE.

General instructions:

1. All questions are compulsory.
2. Questions 1 to 5 are 30 objective type questions. Each carries 1 mark.
3. Internal options are given in questions 18 to 23.
4. Marks of each question are indicated against it.
5. Answer questions 6 to 17 in about 30 words each.
6. Answer questions 18 to 20 in about 75 words each.
7. Answer questions 21 to 23 in about 120 words each.
8. Draw neat and clean labelled diagrams wherever required.

1.	**(i)** *Choose the correct option and write it:* Which of the following is an endothermic process? (a) burning of natural gas (b) decomposition of calcium carbonate (c) quicklime reacting with water (d) respiration	1
	(ii) The gas evolved when baking soda reacts with vinegar is: (a) carbon dioxide (b) hydrogen (c) oxygen (d) nitrogen	1
	(iii) An element forms a basic oxide and has 1 electron in its outermost shell. It is most likely a: (a) metalloid (b) non-metal (c) metal (d) noble gas	1
	(iv) The IUPAC name of CH_3COCH_3 is: (a) propanol (b) ethanone (c) propanal (d) propanone	1
	(v) Which of the following is NOT a function of the liver? (a) storing glycogen (b) secreting bile (c) breaking down toxins (d) producing insulin	1
	(vi) For a concave mirror, the image is virtual and enlarged when the object is placed: (a) between the pole and the focus (b) beyond the centre of curvature (c) at the focus (d) at the centre of curvature	1

2.	**(i)** *Fill in the blanks:* A substance that speeds up a reaction without being used up is called a _____.	1
	(ii) The process of coating iron with zinc is called _____.	1
	(iii) The right side of the heart receives _____ blood from the body.	1
	(iv) In human beings, the embryo gets nutrition from the mother's blood through the _____.	1
	(v) The image formed by a convex lens of an object at infinity is formed at its _____.	1
	(vi) Resistances in series add up, while in parallel their _____ add up.	1
3.	**(i)** *Write True or False:* Bases that dissolve in water are called alkalis.	1
	(ii) Sodium chloride conducts electricity in the solid state.	1
	(iii) Methane is the first member of the alkane series.	1
	(iv) Bile contains digestive enzymes.	1
	(v) The refractive index of a medium has no unit.	1
	(vi) An electric fuse is connected in parallel with the appliance.	1
4.	**(i)** *Answer in one word or one sentence:* Name the acid present in vinegar.	1
	(ii) Which non-metal is essential for our lives and is inhaled by all living beings?	1
	(iii) Name the green pigment in leaves.	1
	(iv) Name the part of the nephron in which blood is filtered.	1
	(v) Which phenomenon causes the advance sunrise and delayed sunset?	1
	(vi) Write the relation between power, current and resistance.	1

© 2026 JEEInfo (www.jeeinfo.in). Free for personal study only. Do not copy, sell or republish without written permission. Not an official MPBSE paper.

5. Match each compound in column A with its use in column B: — 6

Column A	Column B
(i) Bleaching powder	(a) making soaps
(ii) Plaster of Paris	(b) making bread and cake soft and spongy
(iii) Washing soda	(c) supporting fractured bones
(iv) Baking soda	(d) removing permanent hardness of water
(v) Ethanol	(e) disinfecting drinking water
(vi) Sodium hydroxide	(f) solvent in medicines such as cough syrups

6.	Why are decomposition reactions called the opposite of combination reactions? Give one example of each.	2
7.	What happens when an acid reacts with a metal hydrogencarbonate? Write one equation.	2
8.	Why is sodium kept in kerosene but not in water?	2
9.	What is a functional group? Name the functional group in ethanol and in ethanal.	2
10.	Why do herbivores have a longer small intestine than carnivores?	2
11.	What is the function of the valves in the heart?	2
12.	How does a phototropic shoot bend towards light?	2
13.	How do plants grown from seeds differ from those grown by vegetative propagation?	2
14.	Why is DNA copying essential for reproduction?	2
15.	Why does a ray of light passing through the centre of a lens not deviate?	2
16.	What is the difference between a real and a virtual image?	2
17.	How much energy is used by a 60 W bulb in 5 hours? Give your answer in kWh and in joules.	2
18.	What is a precipitation reaction? Give one example. Why is it also a double displacement reaction? **OR** What is the difference between the combustion of saturated and unsaturated hydrocarbons? Why are unsaturated hydrocarbons converted to saturated ones by hydrogenation?	3

© 2026 JEEInfo (www.jeeinfo.in). Free for personal study only. Do not copy, sell or republish without written permission. Not an official MPBSE paper.

19.	Why is excretion important? How do plants get rid of their waste products? Give three ways. **OR** What are the functions of the spinal cord? How is it protected?	3
20.	Explain the difference between myopia and hypermetropia, with one cause of each and the lens used to correct it. **OR** An object is placed 60 cm from a convex lens of focal length 20 cm. Find the position and nature of the image and the magnification.	3
21.	What is the cleansing action of detergents and soaps? Why are they called surfactants? How does hard water reduce the cleaning action of soap? **OR** Explain with examples the differences between ionic and covalent compounds in their bonding, melting points, solubility and conductivity.	4
22.	Describe the female reproductive system in human beings and the function of each part. **OR** What is a food chain? Explain the 10% law of energy transfer, and why food chains usually have only three or four trophic levels.	4
23.	Derive the formula for the equivalent resistance of three resistors in series. Three resistors of 2 Ω, 3 Ω and 5 Ω are connected in series to a 20 V battery. Find the current and the potential difference across each. **OR** What is an electric circuit? Draw a circuit showing a cell, a resistor, an ammeter, a voltmeter and a plug key, and state how the ammeter and voltmeter are connected.	4

© 2026 JEEInfo (www.jeeinfo.in). Free for personal study only. Do not copy, sell or republish without written permission. Not an official MPBSE paper.

Answers and Marking Scheme

Marks for each step are shown in brackets. Any correct alternative method gets full credit.

Question 1

(i) **(b)** decomposition of calcium carbonate. *Working:* Heat must be supplied to break down $CaCO_3$.

(ii) **(a)** carbon dioxide. *Working:* Vinegar contains ethanoic acid, which reacts with the hydrogencarbonate.

(iii) **(c)** metal. *Working:* Metals lose electrons and form basic oxides.

(iv) **(d)** propanone. *Working:* A three-carbon ketone.

(v) **(d)** producing insulin. *Working:* Insulin is made by the pancreas.

(vi) **(a)** between the pole and the focus. *Working:* Only this position gives a virtual image.

Question 2

(i) catalyst.

(ii) galvanisation.

(iii) deoxygenated.

(iv) placenta.

(v) focus (F_2).

(vi) reciprocals.

Question 3

(i) True.

(ii) False: its ions are fixed in the solid; it conducts when molten or dissolved.

(iii) True.

(iv) False: bile has no enzymes; it emulsifies fats.

(v) True: it is a ratio of two speeds.

(vi) False: it is connected in series.

Question 4

(i) Ethanoic (acetic) acid.

(ii) Oxygen.

(iii) Chlorophyll.

(iv) The glomerulus (inside Bowman’s capsule).

(v) Atmospheric refraction.

(vi) $P = I^2R$.

5. (i) – (e) disinfecting drinking water; (ii) – (c) supporting fractured bones; (iii) – (d) removing permanent hardness of water; (iv) – (b) making bread and cake soft and spongy; (v) – (f) solvent in

© 2026 JEEInfo (www.jeeinfo.in). Free for personal study only. Do not copy, sell or republish without written permission. Not an official MPBSE paper.

medicines such as cough syrups; (vi) – (a) making soaps

6. In combination two or more substances form one product; in decomposition one substance breaks into two or more (1). Combination: $2H_2 + O_2 \rightarrow 2H_2O$; decomposition: $2H_2O \rightarrow 2H_2 + O_2$ by electricity (1).

7. Salt, water and carbon dioxide are formed (1). $NaHCO_3 + HCl \rightarrow NaCl + H_2O + CO_2$ (1).

8. Sodium reacts violently with oxygen and water, catching fire (1). It does not react with kerosene, which keeps out air and moisture (1).

9. An atom or group of atoms that decides the chemical properties of a carbon compound (1). Ethanol: alcohol, –OH; ethanal: aldehyde, –CHO (1).

10. Herbivores eat grass, which contains cellulose and takes a long time to digest (1). A longer small intestine gives more time and space for its digestion (1).

11. They allow blood to flow in only one direction (1) and prevent it from flowing backwards when the chambers contract (1).

12. When light falls from one side, auxin collects on the shaded side of the shoot (1). The cells on that side grow longer, so the shoot bends towards light (1).

13. Plants from seeds show variation, as they are produced by sexual reproduction (1). Plants grown by vegetative propagation are genetically identical to the parent (1).

14. DNA carries the information for making proteins and hence for the body design (1). Each new cell needs a copy, so the offspring inherit the design of the parent (1).

15. Near the optical centre, the two faces of a thin lens are nearly parallel, like a thin glass slab (1). The emergent ray is parallel to the incident ray and the sideways shift is negligible (1).

16. A real image is formed where rays actually meet and can be obtained on a screen; it is inverted (1). A virtual image is formed where rays only appear to meet and cannot be obtained on a screen; it is erect (1).

17. $E = 0.06\ \text{kW} \times 5\ \text{h} = 0.3\ \text{kWh}$ (1). $0.3 \times 3.6 \times 10^6 = 1.08 \times 10^6\ \text{J}$ (1).

18. A reaction that forms an insoluble solid, the precipitate (1). Example: $BaCl_2 + Na_2SO_4 \rightarrow BaSO_4 \downarrow$ (white) + 2NaCl (1). Ions of the two reactants are exchanged, so it is also a double displacement reaction (1).

OR Saturated hydrocarbons usually burn with a clean blue flame; unsaturated ones give a yellow, sooty flame (1). In hydrogenation, hydrogen is added to unsaturated compounds in the presence of nickel or palladium (1). Vegetable oils are hydrogenated to make vanaspati ghee; saturated fats keep longer (1).

19. Wastes such as urea are harmful if they build up in the body (1). Plants: excess water is lost by transpiration; oxygen and carbon dioxide diffuse out through the stomata (1). Some wastes are stored in leaves and bark that fall off, or in old xylem as resins and gums (1).

OR It carries messages between the brain and the rest of the body (1). It controls many reflex actions (1). It is protected by the vertebral column (backbone) (1).

20. Myopia: distant objects look blurred; the image forms in front of the retina; caused by an elongated eyeball; corrected by a concave lens (1½). Hypermetropia: near objects look blurred;

© 2026 JEEInfo (www.jeeinfo.in). Free for personal study only. Do not copy, sell or republish without written permission. Not an official MPBSE paper.

the image forms behind the retina; caused by a short eyeball or a lens of too long a focal length; corrected by a convex lens (1½).

OR $\frac{1}{v} = \frac{1}{f} + \frac{1}{u} = \frac{1}{20} - \frac{1}{60} = \frac{1}{30}$, so v = +30 cm (1). m = v/u = 30/(–60) = –0.5 (1). The image is real, inverted and half the size, 30 cm on the other side of the lens (1).

21. Soaps and detergents are molecules with an ionic, water-loving head and a long, oil-loving hydrocarbon tail (1). They gather at the surface between oil and water, reducing surface tension, so they are called surface active agents (1). In water, they form micelles that trap oily dirt in the middle so it is rinsed away (1). Calcium and magnesium ions in hard water react with soap to form insoluble scum, so much soap is wasted (1).

OR Bonding: ionic compounds form by transfer of electrons (NaCl); covalent by sharing (CH_4) (1). Melting point: ionic compounds have high melting points; covalent ones usually low (1). Solubility: ionic compounds dissolve in water; covalent ones mostly in organic solvents (1). Conductivity: ionic compounds conduct when molten or dissolved; covalent compounds do not (1).

22. Two ovaries produce eggs and the hormones oestrogen and progesterone (1). The oviducts (fallopian tubes) carry the egg to the uterus; fertilisation takes place here (1). The uterus is a muscular, bag-like organ where the embryo implants and develops (1). The uterus opens into the vagina through the cervix (1).

OR A sequence of organisms in which each one eats the one before it, e.g. grass → deer → lion (1). Only about 10% of the energy at one trophic level passes on to the next; the rest is used for life processes or lost as heat (1). So the energy available falls sharply at each level (1). After three or four levels too little energy is left to support another level (1).

23. The same current I flows through all; $V = V_1 + V_2 + V_3 = IR_1 + IR_2 + IR_3 = I(R_1 + R_2 + R_3)$, so $R = R_1 + R_2 + R_3$ (1½). R = 10 Ω, I = 20/10 = 2 A (1). V_1 = 4 V, V_2 = 6 V, V_3 = 10 V (1½).

OR A continuous, closed path for an electric current (1). Circuit (2):

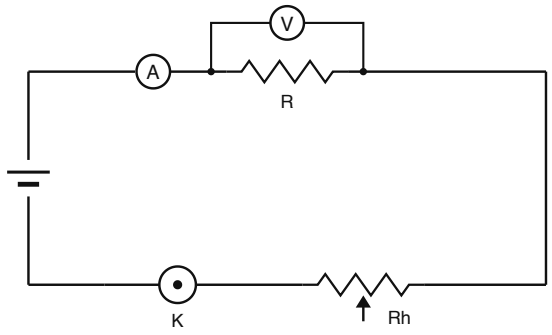

The ammeter is connected in series and the voltmeter in parallel across the resistor (1).

© 2026 JEEInfo (www.jeeinfo.in). Free for personal study only. Do not copy, sell or republish without written permission. Not an official MPBSE paper.